REV	MODIFICATION	DATE
A	Creation	30-Aug-2025

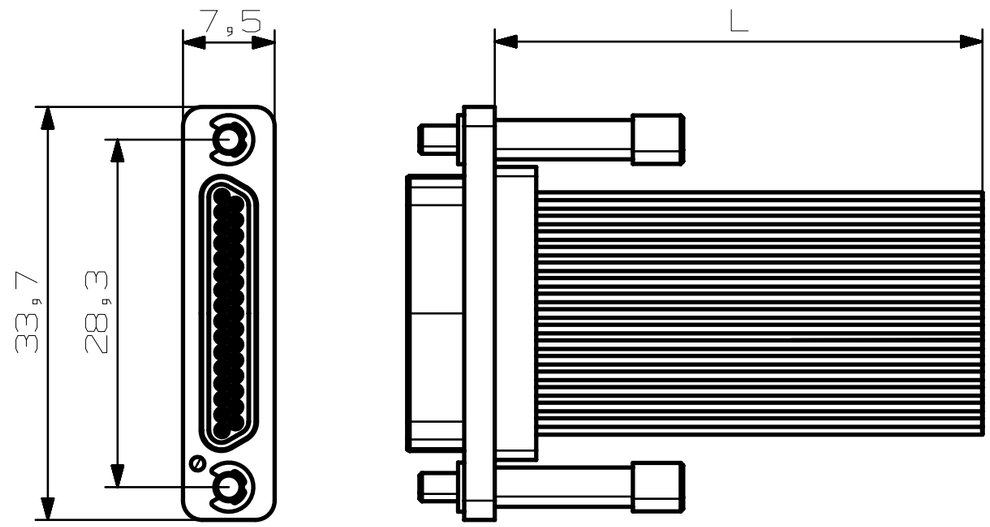

Notes:
1. Micro D 31 Way Male connector (Al + Ni-P)
2. Hardwares - Jackscrew (Passivated)
3. Replace 000 with required length in Centimeters
Tolerance:
Refer table 1 below
4. For other hardware options refer product catalogue

Length L (in CM)	Tolerance
L<10	-0.00 +0.50
10<L<100	-0.00 +3.00
L<100	-0.00 +5.00

MATERIAL : Refer Note

PLATING : Refer Note

Unless Otherwise Specified
Dim : mm / Angles : deg
Gen.Tol. : ± 0.5°
Ra: ---

HARNVIEW INTERCONNECT

TITLE **31 Way Male Inline Pigtail with High profile Socket head Jackscrew**

CAD REF	DRAWN BY	APPROVED BY	DATE	DRAWING NUMBER	REV Major / Minor
				DMHN131PXX000N	
SIZE A3		SCALE		WEIGHT(g) (Approx.)	SHEET 1/1

This drawing is the property of HarnView Interconnect.It can't be reproduced or communicated without our written agreement.